Product change notification (PCN)

Title / short description	V14 Push Pull Connector Laser Marking Change on Rear Housing
Affected article category	Connector
Change category	Marking
Change number	CAF260036-01
Reason for PCN/PDN Revision	

Purpose/objective of the change

Optimization of the product marking concept.The information previously applied directly on the product regarding manufacturing date and production order will in future be provided exclusively via the packaging label. Product traceability remains fully ensured and unchanged.

Detailed description of the change

Currently, the affected V14 connector variants include a laser marking on the rear housing containing manufacturing date and production order information.
With this revision, the laser marking on the rear housing will be discontinued.
The information previously applied directly on the product regarding manufacturing date and production order will in future be provided exclusively via the packaging label. All relevant manufacturing and batch information required for product traceability remains available on the packaging label. Product traceability remains fully ensured and unchanged.
No changes will be made to the dimensions, materials, electrical or mechanical characteristics, approvals, specifications, reliability, or functionality.

Identifying characteristics

The laser marking on the rear housing containing manufacturing date and production order information will no longer be present on future production batches. The change is immediately visible on the product. Please refer to the attached images showing the current and future product appearance.

Start of Production (SOP)	-	**Last Time Delivery (LTD)**	-
Effective date (EOP)	2027-03-31	**End of Service (EOSR)**	-
End of Sales (EOS)	-		

Short-term change (< 6 months) or discontinuation (< 12 months), due to:

- ☐ Software / Firmware Bugfix
- ☐ Short-term delivery stop by supplier
- ☐ Short-term recall by supplier
- ☐ Force majeure
- ☐ Product improvement with customer benefits
- ☐ Others

Attachments

- PCN-CAF260036-01_EN_Pictures.pdf
- Material_list.csv
- PCN-CAF260036-01_EN

2026-9-9 VDMA24903_1.0

Phoenix Contact GmbH & Co. KG
Flachsmarktstraße 8
32825 Blomberg, DE

Tel.: +49 (0) 5235 3-00
Fax: +49 (0) 5235 3-41200
E-Mail: info@phoenixcontact.com

phoenixcontact.com

Material list

Item		Hardware / Firmware		Substitute item	
Item no.	Type	old	new	Item no.	Type
1685317	NBC-R4AC/13,0-94F/R4RQ	01	02		
1685318	NBC-R4AC/23,0-94F/R4RQ	01	02		
1685321	NBC-R4AC/53,0-94F/R4RQ	01	02		
1685319	NBC-R4AC/33,0-94F/R4RQ	01	02		
1685320	NBC-R4AC/43,0-94F/R4RQ	01	02		
1053500	CUC-V14-C1ZNI-S/R4P8 F01	03	04		
1422665	CUC-V14-C1ZNI-B/R4P8	04	05		
1422661	CUC-V14-C1ZNI-S/R4E8	04	05		
1422669	CUC-V14-C1ZNI-S/R4P8:10	04	05		
1149843	CUC-V14-C1ZNI-S/R4IP10G8	03	04		
1422664	CUC-V14-C1ZNI-S/R4P8	04	05		
1149841	CUC-V14-C1ZNI-S/R4IE10G8	03	04		
1053536	FOC-V14-C1ZNI-S/SJFP F01	02	03		
1407896	FOC-V14-C1ZNI-S/SJFP	05	06		
1851370	FOC-SJ:14-SJ:14-HB02/16,0PRV02	00	03		
1851551	FOC-SJ:14-SJ:14-HB02/17,5PRV02	00	03		
1417723	FOC-SJ:14-ST/.../.../...	04	05		
1333125	FOC-SJ:14-SJ:14-HB02/50,0 PR	01	02		
1424188	FOC-SJ:14-SJ:14-HB02/10,0 PR	05	06		
1179817	FOC-SJ:14-SJ:14-HB02/13,0PR V02	03	04		
1423846	FOC-ST:A-SJ:C-HB02/10 PR	05	06		
1851479	FOC-SJ:14-SJ:14-HB02/16,5PRV02	00	03		
1426160	FOC-ST:A-SJ:C-HB02/13 PR	05	06		
1171597	FOC-ST:A-SJ:C-HB02/16 PR L04	02	03		
1171602	FOC-SJ:14-SJ:14-HB02/3,5PR L04	02	03		
1500186	FOC-SJ:14-SJ:14-HB02/18,0PRG01	01	02		
1425814	FOC-ST:A-SJ:C-HB02/13-APG13	04	05		
1171601	FOC-ST:A-SJ:C-HB02/4,5 PR L04	01	02		
1498819	FOC-SJ:14-SJ:14-HB02/15,0PRV02	02	03		
1425813	FOC-ST:A-SJ:C-HB02/13-APG12	04	05		
1425812	FOC-ST:A-SJ:C-HB02/13-APG11	04	05		
1085668	CUC-V14-CZNI-S F01	01	02		
1421783	CUC-PPC-C2ZNI-SX/24FKP5	02	03		
1425515	CUC-PPC-C2ZNI-SS/24FKP5:FC	02	03		
1425514	CUC-PPC-C2ZNI-SX/24FKP5:FC	02	03		
1421785	CUC-PPC-C2ZNI-SS/24FKP5	02	03		
1021518	CUC-PPC-C2ZNI-SX/24FKP5:FC S01	03	04		
1075962	CUC-PPC-C2ZNI-SS-24FKP5 P01	02	03		

Phoenix Contact GmbH & Co. KG
Flachsmarktstraße 8
32825 Blomberg, DE

Tel.: +49 (0) 5235 3-00
Fax: +49 (0) 5235 3-41200
E-Mail: info@phoenixcontact.com

phoenixcontact.com

Item		Hardware / Firmware		Substitute item	
Item no.	Type	old	new	Item no.	Type
1036256	CUC-PPC-C2ZNI-SX/24FKP5:F01	02	03		
1001432	CUC-PPC-C2ZNI-DC	00	01		
1405484	VS-PPC-J-1220-1227-1020-...	08	09		
1404799	VS-PPC-J-1220-1227-1020-0,2	09	10		
1609206	VS-P1220-P1220-C1020/...	08	09		

Phoenix Contact GmbH & Co. KG
Flachsmarktstraße 8
32825 Blomberg, DE

Tel.: +49 (0) 5235 3-00
Fax: +49 (0) 5235 3-41200
E-Mail: info@phoenixcontact.com

phoenixcontact.com

PCN-CAF260036-01_EN_Pictures

Current production status	Future production status
V14 Power Connector	
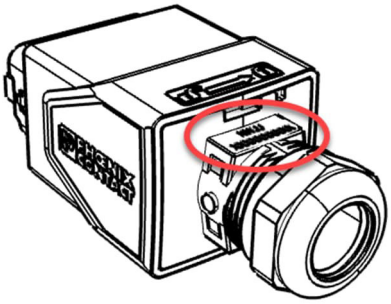	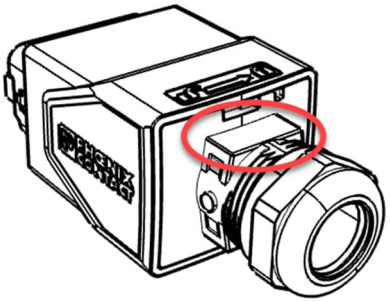
V14 Data Connector	
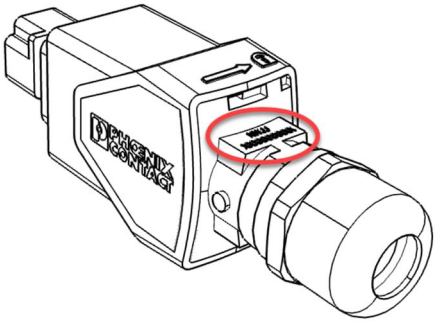	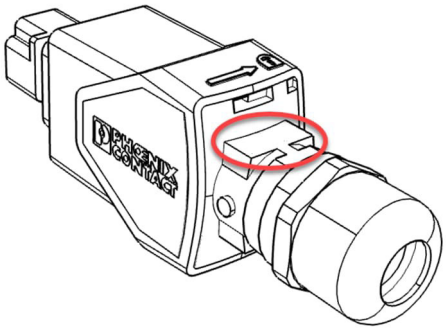
V14 Fiber Optic Connector	
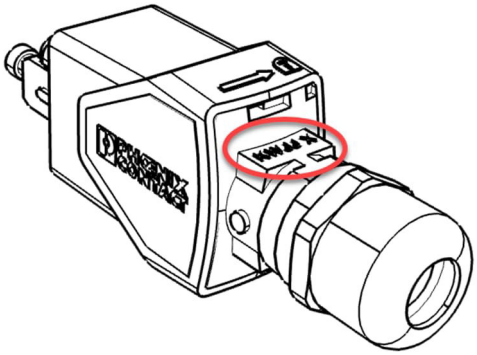	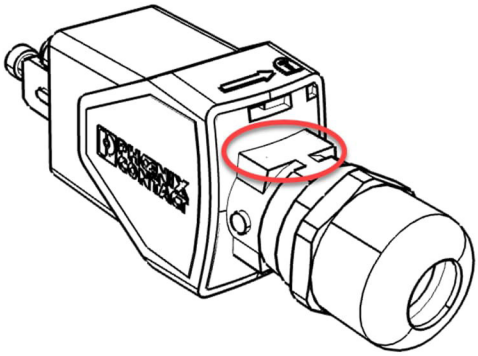

Item no.;Type;old;new;Substitute item;Replacement product designation;eCl@ss 13.0;
1685317;NBC-R4AC/13
1685318;NBC-R4AC/23
1685321;NBC-R4AC/53
1685319;NBC-R4AC/33
1685320;NBC-R4AC/43
1053500;CUC-V14-C1ZNI-S/R4P8 F01;03;04;;;27440290;
1422665;CUC-V14-C1ZNI-B/R4P8;04;05;;;27440290;
1422661;CUC-V14-C1ZNI-S/R4E8;04;05;;;27440290;
1422669;CUC-V14-C1ZNI-S/R4P8:10;04;05;;;27440290;
1149843;CUC-V14-C1ZNI-S/R4IP10G8;03;04;;;27440290;
1422664;CUC-V14-C1ZNI-S/R4P8;04;05;;;27440290;
1149841;CUC-V14-C1ZNI-S/R4IE10G8;03;04;;;27440290;
1053536;FOC-V14-C1ZNI-S/SJFP F01;02;03;;;27440290;
1407896;FOC-V14-C1ZNI-S/SJFP;05;06;;;27440290;
1851370;FOC-SJ:14-SJ:14-HB02/16
1851551;FOC-SJ:14-SJ:14-HB02/17
1417723;FOC-SJ:14-ST/.../.../...;04;05;;;27060307;
1333125;FOC-SJ:14-SJ:14-HB02/50
1424188;FOC-SJ:14-SJ:14-HB02/10
1179817;FOC-SJ:14-SJ:14-HB02/13
1423846;FOC-ST:A-SJ:C-HB02/10 PR;05;06;;;27061003;
1851479;FOC-SJ:14-SJ:14-HB02/16
1426160;FOC-ST:A-SJ:C-HB02/13 PR;05;06;;;27061003;
1171597;FOC-ST:A-SJ:C-HB02/16 PR L04;02;03;;;27061003;
1171602;FOC-SJ:14-SJ:14-HB02/3
1500186;FOC-SJ:14-SJ:14-HB02/18
1425814;FOC-ST:A-SJ:C-HB02/13-APG13;04;05;;;27061003;
1171601;FOC-ST:A-SJ:C-HB02/4
1498819;FOC-SJ:14-SJ:14-HB02/15
1425813;FOC-ST:A-SJ:C-HB02/13-APG12;04;05;;;27061003;
1425812;FOC-ST:A-SJ:C-HB02/13-APG11;04;05;;;27061003;
1085668;CUC-V14-CZNI-S F01;01;02;;;27440208;
1421783;CUC-PPC-C2ZNI-SX/24FKP5;02;03;;;27440290;
1425515;CUC-PPC-C2ZNI-SS/24FKP5:FC;02;03;;;27440290;
1425514;CUC-PPC-C2ZNI-SX/24FKP5:FC;02;03;;;27440290;
1421785;CUC-PPC-C2ZNI-SS/24FKP5;02;03;;;27440290;
1021518;CUC-PPC-C2ZNI-SX/24FKP5:FC S01;03;04;;;27060307;
1075962;CUC-PPC-C2ZNI-SS-24FKP5 P01;02;03;;;27060307;
1036256;CUC-PPC-C2ZNI-SX/24FKP5:F01;02;03;;;27060307;
1001432;CUC-PPC-C2ZNI-DC;00;01;;;27440114;
1405484;VS-PPC-J-1220-1227-1020-...;08;09;;;27440210;
1404799;VS-PPC-J-1220-1227-1020-0
1609206;VS-P1220-P1220-C1020/...;08;09;;;27060307;

0-94F/R4RQ;01;02;;;27060307;
0-94F/R4RQ;01;02;;;27060307;
0-94F/R4RQ;01;02;;;27060307;
0-94F/R4RQ;01;02;;;27060307;
0-94F/R4RQ;01;02;;;27060307;

0PRV02;00;03;;;;
5PRV02;00;03;;;;

0 PR;01;02;;;27061003;
0 PR;05;06;;;27061003;
0PR V02;03;04;;;27061803;

5PRV02;00;03;;;;

5PR L04;02;03;;;27061003;
0PRG01;01;02;;;27061003;

5 PR L04;01;02;;;27061003;
0PRV02;02;03;;;27061803;

2;09;10;;;27440108;

PCN/PDN Number	Customer Number	Company Name	Street
CAF260036-01	401641	TTI, INC.	2441 NORTHEAST PKWY

Postcode/Zip Code	City	Phoenix Contact Item-Nr. (changed/discontinued article)
76106	FORT WORTH	1422664

Phoenix Contact Item Designation (changed/discontinued article)	Report Date	Substitute Item
CUC-V14-C1ZNI-S/R4P8	28.09.2026	

Replacement Product Designation